Steadiness & Innovation in Motion control

SUNG-IL MACHINERY

PRODUCT CATALOGUE

SUNG-IL MACHINERY

SUPPORT UNIT FOR BALL SCREW

Support Unit for Ball Screw

Support Unit for Ball Screw (General Load)

- Structure and Bearing Combinations 208p
- How To Order 208p
- List of Bearings 209p
- Product Recommendation by Ball Screw Outer Diameters 209p
- Recommended Shape of Ball Screw Shaft-end 210~211p

Dimensions / Performance

- EK/EF Series 212~213p
- BK/BF Series 214~215p
- AK/AF Series 216p
- FK/FF Series 217~219p
- CK/CF Series 220p
- WBK Series (Miniature type) 221p

High-load Type Support unit

- Structure and Bearing Combinations / How To Order 222p
- List of Bearings 223p
- Dimensions / Performance [SWBK Series] 224p

Grease-Injection Type Support Unit

- Structure and Product Features / How to Inject Grease / How To Order 225p
- Recommended Shape of Ball Screw Shaft-end 226p

Dimensions / Performance

- BK-G Series 227p
- FK-G Series 228p
- SWBK-G Series 229p

Lock-Nut

- RN Series (General Load) 230p
- ZN Series (General Load) 231p
- HLRN Series (High Load) 232p

Joint Unit

- SJU Series 233p
- SBJU Series 234p

Bearing Unit

- SBS Series 235p
- SBD Series 235p

INDEX (SUPPORT UNIT FOR BALL SCREW)

	Ball Screw Support Unit				
	GENERAL				GREASE INJECTION
Series	EK	EF	BK	BF	BK-G
Use for	FIXED SIDE	SUPPORTED SIDE	FIXED SIDE	SUPPORTED SIDE	FIXED SIDE
Shape					
Page	212p	213p	214p	215p	227p

Series	AK	AF	FK	FF	FK-G
Use for	FIXED SIDE	SUPPORTED SIDE	FIXED SIDE	SUPPORTED SIDE	FIXED SIDE
Shape					
Page	216p	216p	217-218p	219p	228p

Series	CK	CF	WBK	SWBK	SWBK-G
Use for	FIXED SIDE	SUPPORTED SIDE	FIXED SIDE (MINIATURE)	FIXED SIDE (HIGH LOAD)	FIXED SIDE (HIGH LOAD)
Shape					
Page	220p	220p	221p	224p	229p

	Lock-Nut			Joint Unit		Bearing Unit	
Series	RN	ZN	HLRN	SJU	SBJU	SBS	SBD
Shape							
Page	230p	231p	232p	233p	234p	235p	235p

SUPPORT UNIT

SUPPORT UNIT FOR BALL SCREW

Product Features

- High accuracy (No need of additional adjustment)
- Simpler application design possible with standardized bearings
- Compact Structure for installing even at small and narrow areas
- Prevention of foreign material and leak of grease by the inner oil-seal rings
- Diverse finish options available (Standard: Black Oxide)

Product Classification

General Load	Fixed Side	Square					
			EK	BK	AK	CK	BK-G
		Round					
			FK		WBK	FK-G	
	Supported Side	Square					
			EF	BF	AF	CF	
		Round					
			FF				
High Load	Fixed Side	Round					
			SWBK	SWBK-G			

SUPPORT UNIT

SUPPORT UNIT FOR BALL SCREW

Installation Guide

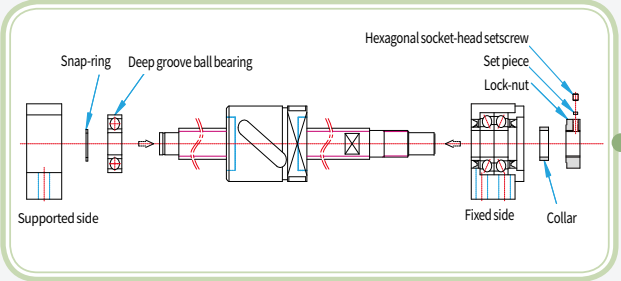

Installation of Support Unit with Ball Screw

1. Mount ball screw onto fixed side support unit.
   - The support unit must not be disassembled.
   - Make sure the oil-seal ring is not folded when the shaft-end is pushed towards the bearing.
   - Fasten set-screws of lock-nut after assembling collars.
   - Mount a nut bracket onto the nut of ball screw.
2. Mount the deep groove ball bearing (of supported side support unit) onto the ball screw shaft-end, and fix with a snap-ring to secure and then insert the assembly to the housing of supported side support unit.

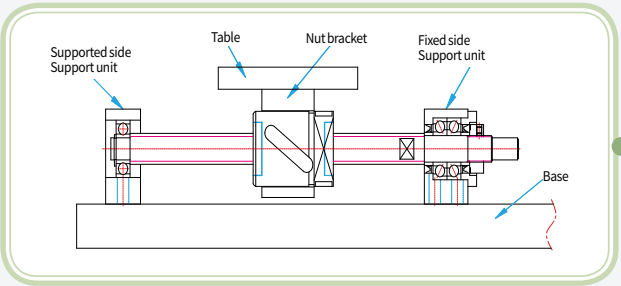

Assembly with the Table & Base

1. Assemble the table with the nut bracket of ball screw.
2. Mount the fixed side support unit temporarily with the base.
   - If the fixed side support unit is used as a reference point, make sure there is clearance secured between the outer diameter of ball screw nut and table. (or inner diameter of bracket)
   - If the table is used as a reference point, adjust height with shims for square shaped support unit or secure clearance between outer and inner diameter of inserted area for round shaped support unit.
3. Mount the supported side support unit temporarily with the base.

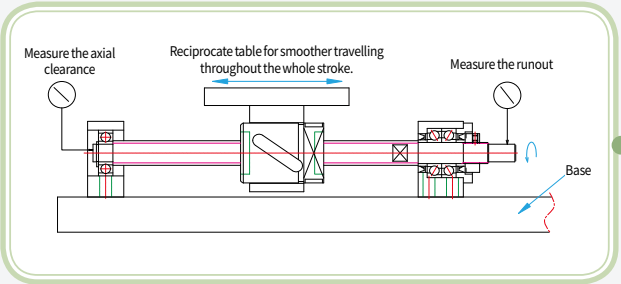

Checking Accuracy & Fastening Fully

1. Shift the table towards the center of the shaft and make it reciprocate between both ends so that motion is adjusted running in line as smoothly as possible.
2. Measure the runout of the ball screw shaft-end and axial end-play by using a dial gauge. In the meantime, fully fasten in the following order, the nut bracket with the table, fixed side support unit and base, supported side support unit and base.

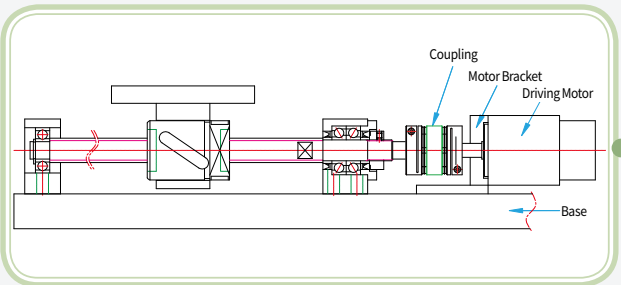

Connection with the Driving Motor

1. Fully mount the motor bracket to the base accurately aligning with the ball screw.
2. Connect the motor and the ball screw with a coupling.
3. Operate the motor trial-run at a slow speed to make sure the assembly is accurately done.

SUPPORT UNIT

SUPPORT UNIT FOR BALL SCREW

Made-To-Order Process

Sung-il Machinery can conduct Made-To-Order processes (customization) upon our customer's requests.

Various Materials/Surface Treatment Options

Standard

Low-temperature
Black Chrome Plating (Raydent)

Stainless Steel

Electroless Nickel Plating

	Standard	Made-To-Order
Material	STEEL	High Strength Aluminum Alloy Stainless Steel
Surface Treatment	Black Oxide	Low-temperature Black Chrome Plating Electroless Nickel Plating

Non-standard Shape Design Support

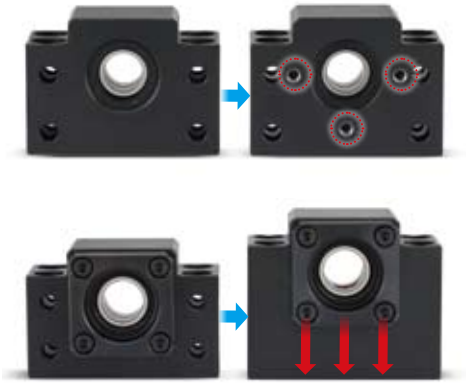
Modified Design
(e.g. additional tapped-holes, changed height etc.)

Completely New Design
(according to special specifications)

Various Grease Options (selected by customer)

- Special grease options available for vacuum/ cleanroom purposes
- Or, other grease can be applied upon request (The specific grease model name is required in advance)

※ For these Made-To-Order processes above, please contact Sung-il Customer Service team prior to firm order placement, in order to discuss accurate specification/design.

SUPPORT UNIT

SUPPORT UNIT FOR BALL SCREW (GENERAL LOAD)

Structure

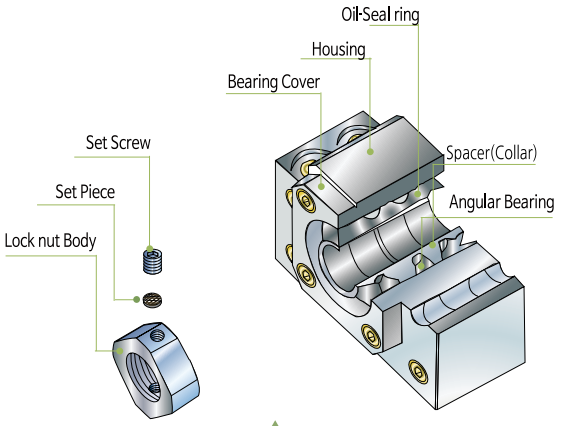

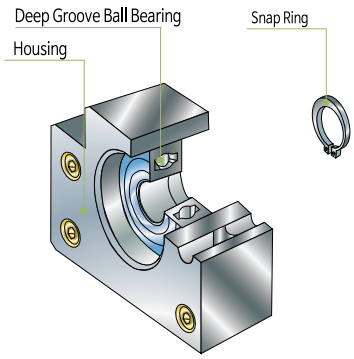

Fixed Side

- DF arrangement of angular contact ball bearing combinations
- Full ranges with high accuracy without runout according to adequate preload given in advance
- Prevention of foreign material and leak of grease by the inner oil-seal rings
- Accompanied by a high accuracy lock-nut and collars(spacer)

Supported Side

- Accompanied by a deep-groove ball bearing and a snap-ring

Bearing Combinations

1. **Arrangement types of angular contact ball bearing combinations**

1) DB combination (back to back): The large distance between the effective load centers results in higher rigidity at the moment load. However if accuracy of housing is not enough, it may produce damage e.g. flaking at a earlier stage due to the increased internal load. Preload is determined by torque when the user fastens the lock-nut.
2) DF combination (face to face): The small distance between effective load centers limits bearing capacity to sustain moment load, however it performs at a better level to absorb the margin of assembly error. Preload is determined at maker's assembly of bearing cover, thus this way allows easier self-management for users.

2. **Standard arrangement type of Sung-il products is DF combination.**

※ In any case DB combination type is requested, please contact Sung-il Customer Service team for further assistance.

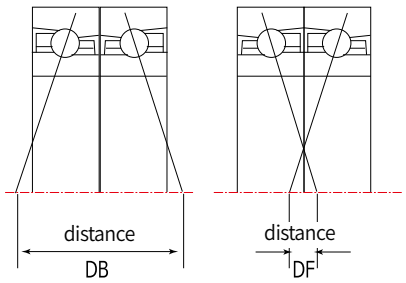

How to Order

Fixed Side

BK12 — Model
P0-C7 — ① Precision grade mark
- — ② Surface Treatment

	Mark (Fixed Side Only)	Bearing precision grade	Preload
①Precision grade mark	P5	P5	Medium
	C8	General	Medium
	P0-C7	General	Light

Supported Side

BF12 — Model
- — ② Surface Treatment

	mark	Surface Treatment
②Surface Treatment	no mark	Black Oxide
	RA	Low temperature Black Chrome Plating (Raydent)

SUPPORT UNIT

SUPPORT UNIT FOR BALL SCREW (GENERAL LOAD)

List of Bearings (Fixed Side)

Bearing Inner dia. (mm)	Model					Bearing		
	EK	BK	AK	FK	CK	P5	C8	P0-C7
Ø4	EK4			FK4		AC-4-12-DF		634ZZ
Ø5	EK5			FK5		AC-5-14-DF		625ZZ
Ø6	EK6			FK6		706ATYNDFMP5	706ATYNDFC8	606ZZ
		BK6						EN6
Ø8	EK8			FK8	CK8	708ATYNDFMP5	708ATYNDFC8	EN8/BA22-1
		BK8						EN8/BA22-1
			AK8			708ATYNDFMP5		
Ø10	EK10	BK10	AK10	FK10	CK10	7000ATYNDFMP5	7000AWDFM	7000AW
Ø12	EK12	BK12	AK12	FK12	CK12	7001ATYNDFMP5	7001AWDFM	7001AW
Ø15	EK15	BK15	AK15	FK15	CK15	7002ATYNDFMP5	7002AWDFM	7002AW
Ø17		BK17		FK17		7203ATYNDFMP5	7203AWDFM	7203AW
Ø20	EK20		AK20	FK20		7204ATYNDFMP5	7204AWDFM	7204AW
		BK20				7004ATYNDFMP5	7004AWDFM	7004AW
Ø25	EK25	BK25		FK25		7205ATYNDFMP5	7205AWDFM	7205AW
Ø30		BK30		FK30		7206ATYNDFMP5	7206AWDFM	7206AW
Ø35		BK35		FK35		7207ATYNDFMP5	7207AWDFM	7207AW
Ø40		BK40		FK40		7208ATYNDFMP5	7208AWDFM	7208AW

List of Bearings (Supported Side)

Bearing Inner dia. (mm)	Model					Bearing
	EF	BF	AF	FF	CF	
Ø6	EF6/EF8	BF6/BF8	AF8	FF6/FF8	CF8	606ZZ
Ø8	EF10	BF10	AF10	FF10		608ZZ
Ø10	EF12	BF12	AF12	FF12	CF10/CF12	6000ZZ
Ø15	EF15	BF15	AF15	FF15	CF15	6002ZZ
Ø17		BF17		FF17		6203ZZ
Ø20	EF20		AF20	FF20		6204ZZ
		BF20				6004ZZ
Ø25	EF25	BF25		FF25		6205ZZ
Ø30		BF30		FF30		6206ZZ
Ø35		BF35		FF35		6207ZZ
Ø40		BF40		FF40		6208ZZ

Product Recommendation by Ball Screw Outer Diameters

Ball Screw Outer dia. (mm)	Fixed Side					Supported Side				
	EK	BK	AK	FK	CK	EF	BF	AF	FF	CF
Ø6	EK4			FK4						
Ø8	EK5/EK6	BK6		FK5/FK6		EF6	BF6		FF6	
Ø10, Ø12	EK8	BK8	AK8	FK8	CK8	EF8	BF8	AF8	FF8	CF8
Ø10, Ø12, Ø15	EK10	BK10	AK10	FK10	CK10	EF10	BF10	AF10	FF10	CF10
Ø14, Ø15, Ø16, Ø18	EK12	BK12	AK12	FK12	CK12	EF12	BF12	AF12	FF12	CF12
Ø20	EK15	BK15	AK15	FK15	CK15	EF15	BF15	AF15	FF15	CF15
Ø25, Ø28		BK17		FK17			BF17		FF17	
	EK20	BK20	AK20	FK20		EK20	BF20	AF20	FF20	
Ø30, Ø32, Ø36	EK25	BK25		FK25		EF25	BF25		FF25	
Ø40		BK30		FK30			BF30		FF30	
Ø45		BK35		FK35			BF35		FF35	
Ø50~Ø55		BK40		FK40			BF40		FF40	

SUPPORT UNIT

SUPPORT UNIT FOR BALL SCREW (GENERAL LOAD)

Recommended Shape Of Ball Screw Shaft-End (Fixed Side)

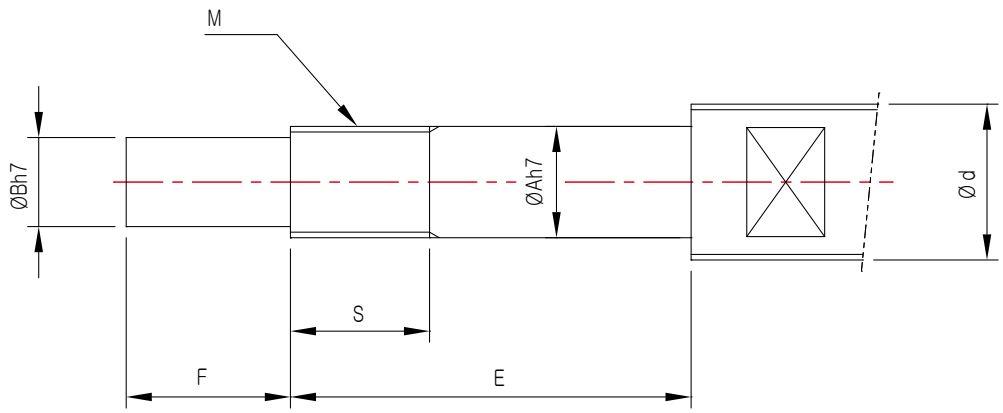

Dimensions(mm)																							Lock-nut	
d	A	B	EK				BK				AK				FK				CK				Model	Size (MxPitch)
			Model	E	F	S	Model	E	F	S	Model	E	F	S	Model	E	F	S	Model	E	F	S		
Ø6	4	3	EK4	23	5	8									FK4	23	5	8					RN4	M4 x 0.5
Ø8	5	4	EK5	25	6	8									FK5	25	6	8					RN5	M5 x 0.5
	6	4	EK6	30	8	8	BK6	30	8	8					FK6	30	8	8					RN6	M6 x 0.75
Ø10 - Ø12	8	6	EK8	35	9	10	BK8	35	9	10	AK8	30	9	10	FK8	35	9	10	CK8	34	9	10	RN8	M8 x 1/0.75
Ø10 - Ø15	10	8	EK10	36	15	11	BK10	39	15	16	AK10	36	15	11	FK10	36	15	11	CK10	36	15	11	RN10	M10 x 1/0.75
Ø14 - Ø18	12	10	EK12	36	15	11	BK12	39	15	14	AK12	36	15	11	FK12	36	15	11	CK12	36	15	11	RN12	M12 x 1
Ø20	15	12	EK15	49	20	13	BK15	40	20	12	AK15	49	20	13	FK15	49	20	13	CK15	49	20	13	RN15	M15 x 1
Ø25 - Ø28	17	15					BK17	53	23	17					FK17	57	23	17					RN17	M17 x 1
	20	17	EK20	64	25	17	BK20	53	25	16	AK20	64	25	17	FK20	64	25	17					RN20	M20 x 1
Ø30 - Ø36	25	20	EK25	76	30	22	BK25	65	30	19					FK25	76	30	20					RN25	M25 x 1.5
Ø40	30	25					BK30	72	38	25					FK30	72	38	25					RN30	M30 x 1.5
Ø45	35	30					BK35	83	45	28					FK35	83	45	28					RN35	M35 x 1.5
Ø50 - Ø55	40	35					BK40	98	50	35					FK40	98	50	35					RN40	M40 x 1.5

SUPPORT UNIT

SUPPORT UNIT FOR BALL SCREW (GENERAL LOAD)

Recommended Shape Of Ball Screw Shaft-End (Supported Side)

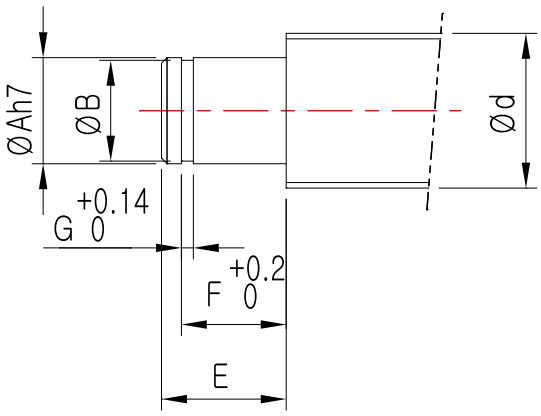

Dimensions(mm)										
d	EF	BF	AF	FF	CF	A	E	B	F	G
Ø8	EF6	BF6		FF6		6	9	5.6	6.9	0.9
Ø10 - Ø12	EF8	BF8	AF8	FF8	CF8	6	9	5.6	6.9	0.9
Ø10 - Ø15	EF10	BF10	AF10	FF10		8	10	7.6	7.9	0.9
Ø14 - Ø18	EF12	BF12	AF12	FF12	CF12	10	11	9.6	9.15	1.15
Ø20	EF15	BF15	AF15	FF15	CF15	15	13	14.3	10.15	1.15
Ø25 - Ø28		BF17		FF17		17	16	16.2	13.15	1.15
	EF20	BF20	AF20	FF20		20	19(16)	19	15.35(13.35)	1.35
Ø30 - Ø36	EF25	BF25		FF25		25	20	23.9	16.35	1.35
Ø40		BF30		FF30		30	21	28.6	17.75	1.75
Ø45		BF35		FF35		35	22	33	18.75	1.75
Ø50 - Ø55		BF40		FF40		40	23	38	19.95	1.95

※ The values in brackets are for model no. BF-20.

SUPPORT UNIT : EK SERIES

SUPPORT UNIT FOR BALL SCREW (GENERAL LOAD)

EK4 ~ EK5

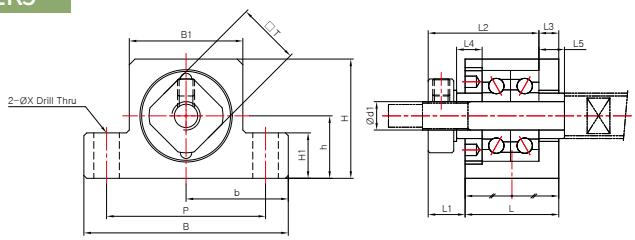

EK6 ~ EK8

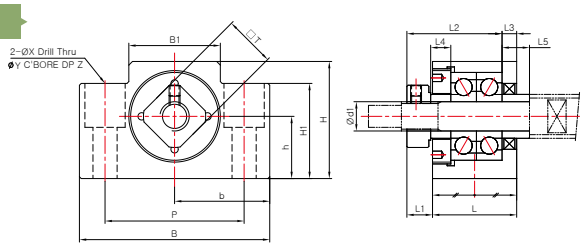

EK10 ~ EK25

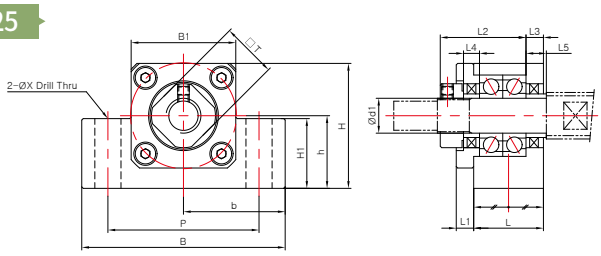

Additional note for [EK-25]

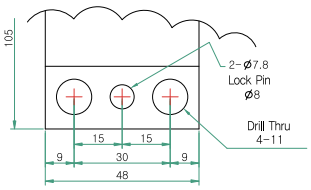

Dimensions

Model	Sizes (mm)																		Mass (g)
	Body																Spacer(collar)		
	d1	L	L1	L2	L3	B	H	b±0.02	h±0.02	B1	H1	P	X	Y	Z	□T	L4	L5	
EK4 P5/P0-C7	4	15	5.5	17.5/18.5	3/2	34	19	17	10	18	7	26	4.5	-	-	10	4.5/3.5	4.5/3.5	50
EK5 P5/P0-C7	5	16.5	5.5/6.5	19.5	3.5	36	21	18	11	20	8	28	4.5	-	-	11	5.5/4.5	5.5/4.5	68
EK6	6	20	5.5	22	3.5	42	25	21	13	18	20	30	5.5	9.5	11	12	5	7	120
EK8	8	23	7	26	4	52	32	26	17	25	26	38	6.6	11	12	14	5.5	7.5	230
EK10	10	24	6	29.5	6	70	43	35	25	36	24	52	9	-	-	16	5.5	5.5	430
EK12	12	24	6	29.5	6	70	43	35	25	36	24	52	9	-	-	19	5.5	5.5	420
EK15	15	25	6	36	5	80	50	40	30	41	25	60	11	-	-	22	10	10	530
EK20	20	42	10	50	10	95	58	47.5	30	56	25	75	11	-	-	30	11	11	1310
EK25	25	48	13	59	14	105	68	52.5	35	66	25	85	<See the additional note above>			35	14	14	1950

※ Only EK-4 and EK-5 have different dimensions according to the bearing grade (P5/P0-C7).

SUPPORT UNIT : EF SERIES

SUPPORT UNIT FOR BALL SCREW (GENERAL LOAD)

EF6 ~ EF8

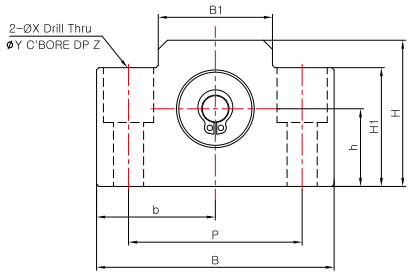

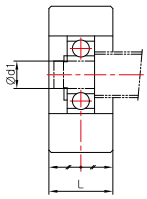

EF10 ~ EF25

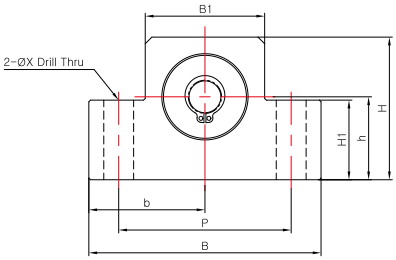

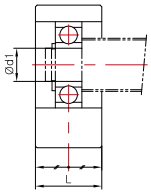

Dimensions

Model	Sizes (mm)												Mass (g)	Snap-ring	Bearing
	Body														
	d1	L	B	H	b±0.02	h±0.02	B1	H1	P	X	Y	Z			
EF6	6	12	42	25	21	13	18	20	30	5.5	9.5	11	120	C6	606ZZ
EF8	6	14	52	32	26	17	25	26	38	6.6	11	12	230	C6	606ZZ
EF10	8	20	70	43	35	25	36	24	52	9	-	-	430	C8	608ZZ
EF12	10	20	70	43	35	25	36	24	52	9	-	-	420	C10	6000ZZ
EF15	15	20	80	50	40	30	41	25	60	9	-	-	530	C15	6002ZZ
EF20	20	26	95	58	47.5	30	56	25	75	11	-	-	1310	C20	6204ZZ
EF25	25	30	105	68	52.5	35	66	25	85	11	-	-	1950	C25	6205ZZ

SUPPORT UNIT : BK SERIES

SUPPORT UNIT FOR BALL SCREW (GENERAL LOAD)

BK6 ~ BK8

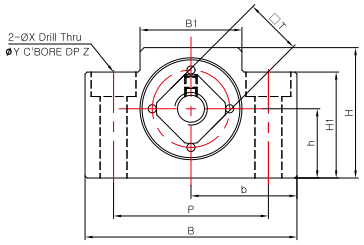

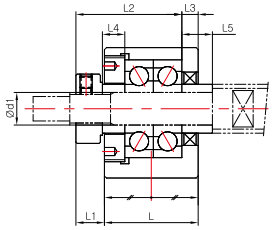

BK10 ~ BK40

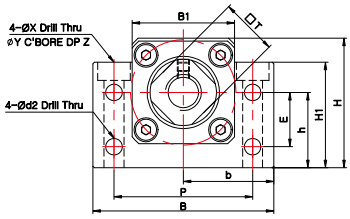

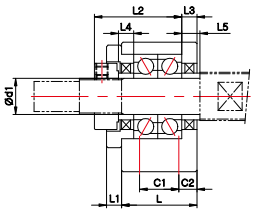

Dimensions

Model	Sizes (mm)																					Mass (g)
	Body																			Spacer(collar)		
	d1	L	L1	L2	L3	B	H	b±0.02	h±0.02	B1	H1	E	P	C1	C2	d2	X	Y	Z	□T	L4	L5	
BK6	6	23	5	24	4	52	32	26	17	25	26	-	38	-	-	-	6.6	11	6	12	5	5	230
BK8	8	23	7	26	4	52	32	26	17	25	26	-	38	-	-	-	6.6	11	6	14	5.5	7.5	230
BK10	10	25	5	29	5	60	39	30	22	34	32.5	15	46	13	6	5.5	6.6	10.8	5	16	5	5	360
BK12	12	25	5	29	5	60	43	30	25	34	35	18	46	13	6	5.5	6.6	10.8	6	19	5	5	390
BK15	15	27	6	32	6	70	48	35	28	40	38	18	54	15	6	5.5	6.6	11	6	22	6	6	530
BK17	17	35	9	44	7	86	64	43	39	50	55	28	68	19	8	6.6	9	14	8.5	24	7	7	1270
BK20	20	35	8	43	8	88	60	44	34	52	50	22	70	19	8	6.6	9	14	8.5	30	8	8	1650
BK25	25	42	12	54	9	106	80	53	48	64	70	33	85	22	10	9	11	17.5	11	35	9	9	2310
BK30	30	45	14	61	9	128	89	64	51	76	78	33	102	23	11	11	14	20	13	40	9	9	3330
BK35	35	50	14	67	12	140	96	70	52	88	79	35	114	26	12	11	14	20	13	50	12	12	4380
BK40	40	61	18	76	15	160	110	80	60	100	90	37	130	33	14	14	18	26	17.5	50	15	15	6670

SUPPORT UNIT : BF SERIES

SUPPORT UNIT FOR BALL SCREW (GENERAL LOAD)

BF6 ~ BF8

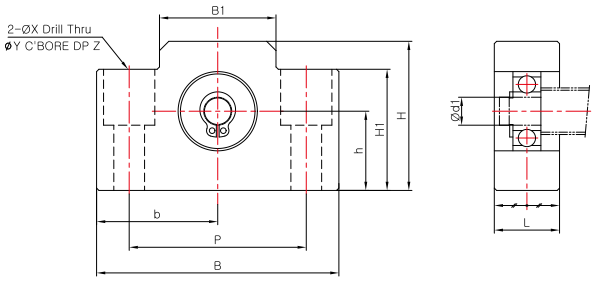

BF10 ~ BF40

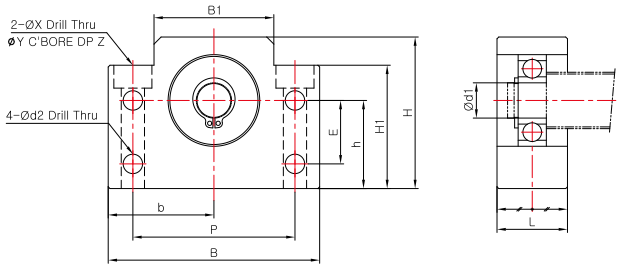

Dimensions

Model	Sizes (mm)														Mass (g)	Snap-ring	Bearing
	Body																
	d1	L	B	H	b±0.02	h±0.02	B1	H1	E	P	d2	X	Y	Z			
BF6/BF8	6	14	52	32	26	17	25	26	-	38	-	6.6	11	12	120	C6	606ZZ
BF10	8	20	60	39	30	22	34	32.5	15	46	5.5	6.6	10.8	5	260	C8	608ZZ
BF12	10	20	60	43	30	25	34	35	18	46	5.5	6.6	10.8	6.5	270	C10	6000ZZ
BF15	15	20	70	48	35	28	40	38	18	54	5.5	6.6	11	6.5	310	C15	6002ZZ
BF17	17	23	86	64	43	39	50	55	28	68	6.6	9	14	8.5	680	C17	6203ZZ
BF20	20	26	88	60	44	34	52	50	22	70	6.6	9	14	8.5	710	C20	6004ZZ
BF25	25	30	106	80	53	48	64	70	33	85	9	11	17.5	11	1340	C25	6205ZZ
BF30	30	32	128	89	64	51	76	78	33	102	11	14	20	13	1880	C30	6206ZZ
BF35	35	32	140	96	70	52	88	79	35	114	11	14	20	13	2080	C35	6207ZZ
BF40	40	37	160	110	80	60	100	90	37	130	14	18	26	17.5	3100	C40	6208ZZ

SUPPORT UNIT : AK/AF SERIES

SUPPORT UNIT FOR BALL SCREW (GENERAL LOAD)

AK8 ~ AK20

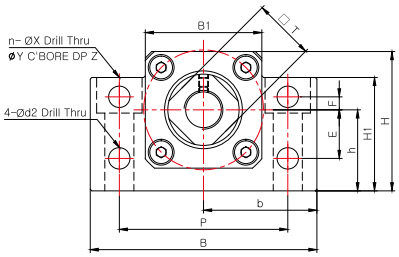

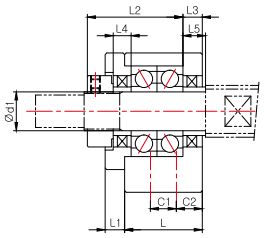

Dimensions

Model	Sizes (mm)																							Mass (g)
	Body																					Spacer(collar)		
	d1	L	L1	L2	L3	B	H	b±0.02	h±0.02	B1	H1	E	F	P	C1	C2	d2	n	X	Y	Z	□T	L4	L5	
AK8	8	20	3	24.5	4	52	32	26	17	25	26	10	4	38	-	10	5.5	2	6.6	11	12	14	4	4	190
AK10	10	24	6	29.5	6	70	43	35	25	36	35	15	4	52	-	12	6.6	2	9	14	11	16	5.5	5.5	450
AK12	12	24	6	29.5	6	70	43	35	25	36	35	15	4	52	-	12	6.6	2	9	14	11	19	5.5	5.5	440
AK15	15	25	6	36	5	80	50	40	30	41	40	15	4	60	-	12.5	6.6	2	11	17	15	22	10	10	570
AK20	20	42	10	50	10	95	58	47.5	30	56	45	-	-	75	22	10	-	4	11	17	15	30	11	11	1400

AF8 ~ AF20

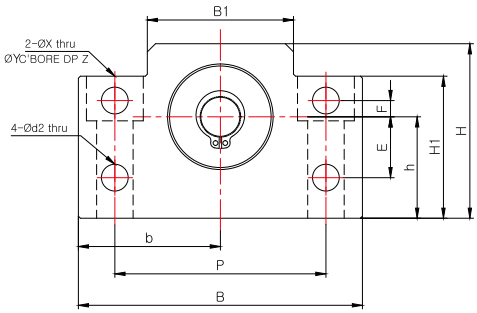

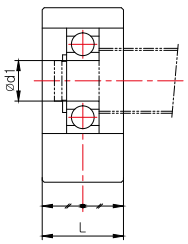

Dimensions

Model	Sizes (mm)															Mass (g)	Snap-ring	Bearing
	Body																	
	d1	L	B	H	b±0.02	h±0.02	B1	H1	E	F	P	d2	X	Y	Z			
AF8	6	15	52	32	26	17	25	26	10	4	38	5.5	6.6	11	12	130	C6	606ZZ
AF10	8	20	70	43	35	25	36	35	15	4	52	6.6	9	14	11	320	C8	608ZZ
AF12	10	20	70	43	35	25	36	35	15	4	52	6.6	9	14	11	330	C10	6000ZZ
AF15	15	20	80	50	40	30	41	40	15	4	60	6.6	9	14	11	370	C15	6002ZZ
AF20	20	26	95	58	47.5	30	56	45	-	-	75	-	11	17	15	660	C20	6204ZZ

SUPPORT UNIT : FK SERIES

SUPPORT UNIT FOR BALL SCREW (GENERAL LOAD)

FK4 ~ FK8

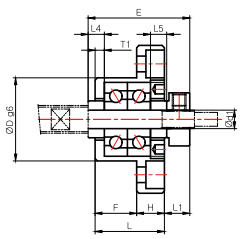

[Install Method A]

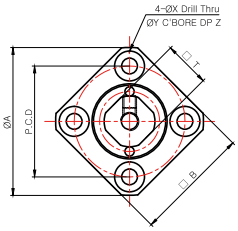

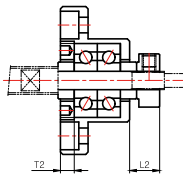

[Install Method B]

FK10 ~FK30

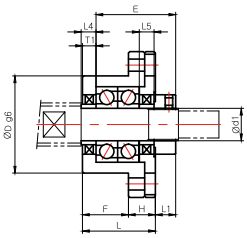

[Install Method A]

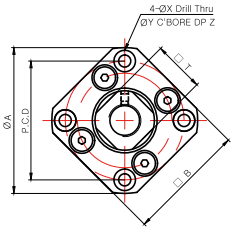

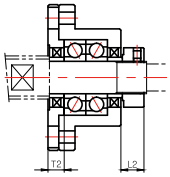

[Install Method B]

※ **Additional note for [FK-30]**
In case of choosing "Install Method B", size of spacer(collar) needs to be accordingly changed. Please contact Sung-il Customer Service team for more details.

Dimensions

Model	Sizes (mm)																			Mass (g)
	Body																	Spacer(collar)		
	d1	L	H	F	E	D	A	P.C.D	□B	Install Method A		Install Method B		X	Y	Z	□T	L4	L5	
										L1	T1	L2	T2							
FK4 P5/P0-C7	4	15	6	9	22	18	32	24	25	5.5	3/2	6.5	4/3	3.4	6	4	10	4.5/3.5	4.5/3.5	40
FK5 P5/P0-C7	5	16.5	6	10.5	24	20	34	26	26	5.5/6.5	3.5	7/6	5/3	3.4	6/6.5	4	11	5.5/4.5	5.5/4.5	50
FK6	6	20	7	13	29	22	36	28	28	5.5	3.5	8.5	4.5	3.4	6.5	4	12	7	5	65
FK8	8	23	9	14	33.5	28	43	35	35	7	4	10	5	3.4	6.5	4	14	7.5	5.5	125
FK10	10	27	10	17	29.5	34	52	42	42	7.5	5	8.5	6	4.5	8	4	16	5.5	5.5	200
FK12	12	27	10	17	29.5	36	54	44	44	7.5	5	8.5	6	4.5	8	4	19	5.5	5.5	225
FK15	15	32	15	17	36	40	63	50	52	10	6	12	8	5.5	9.5	6	22	10	10	340
FK17	17	45	22	23	46	50	77	62	61	10	9	13	12	6.6	11	10	24	9	9	770
FK20	20	52	22	30	50	57	85	70	68	8	10	12	14	6.6	11	10	30	11	11	1065
FK25	25	57	27	30	60	63	98	80	79	13	10	20	17	9	15	13	35	15	15	1465
FK30	30	62	30	32	61	75	117	95	93	11	12	21	18	11	17.5	15	40	9	9	2300

※ Only FK-4 and FK-5 have different dimensions according to the bearing grade (P5/P0-C7).

SUPPORT UNIT : FK SERIES

SUPPORT UNIT FOR BALL SCREW (GENERAL LOAD)

FK25D, FK30D

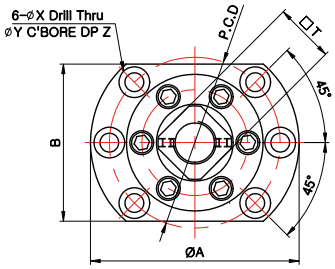

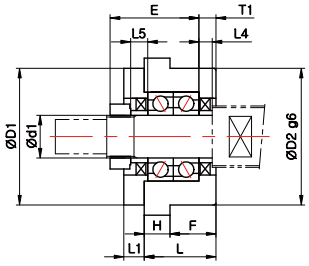

FK35, FK40

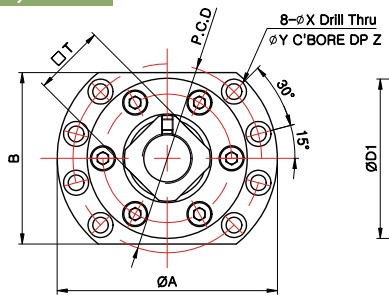

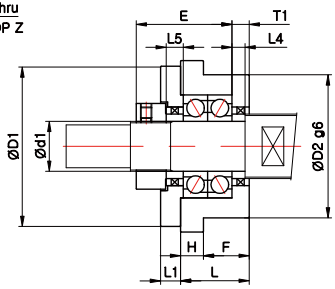

Dimensions

Model	Sizes (mm)																		Mass (g)
	Body																Spacer(collar)		
	d1	L	H	F	E	D1	D2	A	P.C.D	B	L1	T1	X	Y	Z	□T	L4	L5	
FK25D	25	42	15	27	52	80	80	122	100	92	12	10	11	18	11	35	10	10	2500
FK30D	30	45	15	30	59	96	90	138	116	106	14	11	11	18	11	40	11	11	3500
FK35	35	48	16	32	67	112	100	154	132	120	14	12	11	17.5	11	50	12	12	4080
FK40	40	61	18	43	76	126	120	176	150	128	18	16	14	20	13	50	15	15	6750

SUPPORT UNIT : FF SERIES

SUPPORT UNIT FOR BALL SCREW (GENERAL LOAD)

FF6 ~ FF30

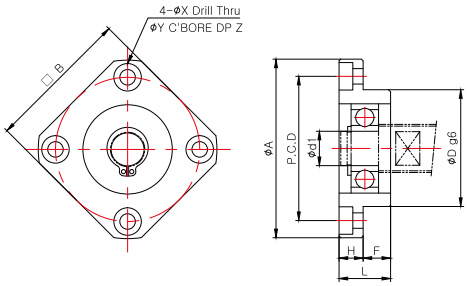

Dimensions

Model	Sizes (mm)											Mass (g)	Snap-ring	Bearing
	Body													
	d1	L	H	F	D	A	P.C.D	□B	X	Y	Z			
FF6/FF8	6	10	6	4	22	36	28	28	3.4	6.5	3	30	C6	606ZZ
FF10	8	12	7	5	28	43	35	35	3.4	6.5	4	60	C8	608ZZ
FF12	10	15	7	8	34	52	42	42	4.5	8	4	100	C10	6000ZZ
FF15	15	17	9	8	40	63	50	52	5.5	9.5	5.5	140	C15	6002ZZ
FF17	17	20	11	9	50	77	62	61	6.6	11	6.5	290	C17	6203ZZ
FF20	20	20	11	9	57	85	70	68	6.6	11	6.5	380	C20	6204ZZ
FF25	25	24	14	10	63	98	80	79	9	14	8.5	590	C25	6205ZZ
FF30	30	27	18	9	75	117	95	93	11	17.5	11	930	C30	6206ZZ

FF25D, FF30D

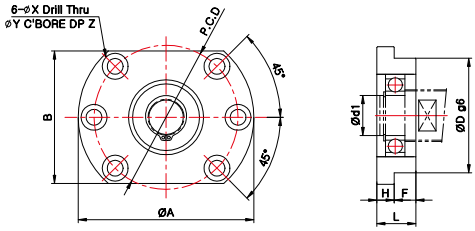

FF35, FF40

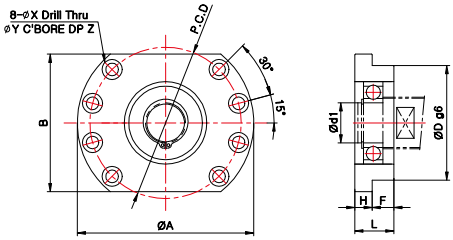

Dimensions

Model	Sizes (mm)											Mass (g)	Snap-ring	Bearing
	Body													
	d1	L	H	F	D	A	P.C.D	□B	X	Y	Z			
FF25D	25	30	15	15	80	122	100	92	11	18	11	1400	C25	6205ZZ
FF30D	30	32	15	17	90	138	116	106	11	18	11	1800	C30	6206ZZ
FF35	35	34	15	19	100	154	132	120	11	17.5	11	2050	C35	6207ZZ
FF40	40	36	18	18	120	176	150	128	14	20	13	3050	C40	6208ZZ

SUPPORT UNIT : CK/CF SERIES (Low-Centered Type)

SUPPORT UNIT FOR BALL SCREW (GENERAL LOAD)

CK8 ~ CK15

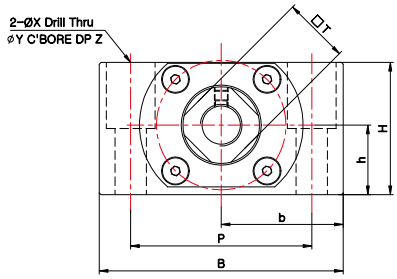

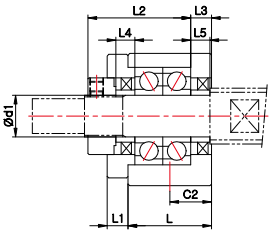

Dimensions

Model	Sizes (mm)																	Mass (g)
	Body															Spacer(collar)		
	d1	L	L1	L2	L3	B	H	b±0.02	h±0.02	P	C2	X	Y	Z	□T	L4	L5	
CK8	8	21.5	4	26.5	3.5	62	31	31	15.5	46	11	9	14	18	14	6	6	260
CK10	10	24	6	29.5	6	70	38	35	20	52	12	9	14	19	16	5.5	5.5	430
CK12	12	24	6	29.5	6	70	38	35	20	52	12	9	14	19	19	5.5	5.5	430
CK15	15	25	6	38	5	80	42	40	22	60	12.5	11	17	23	22	10	10	540

CF8 ~ CF15

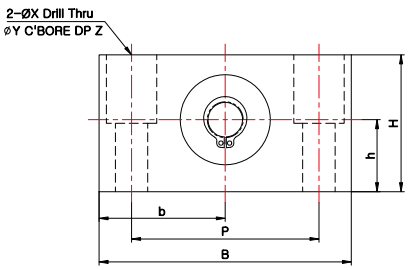

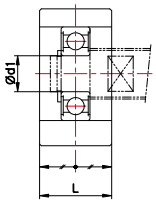

Dimensions

Model	Sizes (mm)										Mass (g)	Snap-ring	Bearing
	Body												
	d1	L	B	H	b±0.02	h±0.02	P	X	Y	Z			
CF8	6	16	62	31	31	15.5	46	9	14	18	165	C6	606ZZ
CF10	10	20	70	38	35	20	52	9	14	19	285	C10	6000ZZ
CF12	10	20	70	38	35	20	52	9	14	19	285	C10	6000ZZ
CF15	15	20	80	42	40	22	60	9	14	23	355	C15	6002ZZ

SUPPORT UNIT : WBK SERIES (Miniature Type)

SUPPORT UNIT FOR BALL SCREW (GENERAL LOAD)

WBK04, WBK06

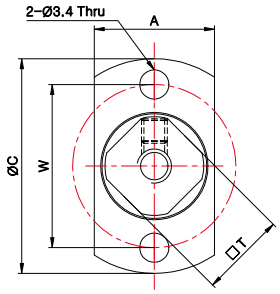

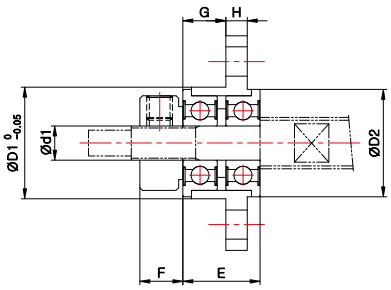

※ Make sure the lock-nut is fastened fully due to frequent detachment of flange shaped miniature ball bearing.
※ Spacer(collar) are mounted on the body at release for the loss prevention.

Dimensions

Model	Sizes (mm)												
	Body											Lock-nut	Spacer(collar)
	d1	A	C	D1	D2	E	F	G	H	W	T	M	
WBK04	4	14	25	13	12.5	9	5	5	2.5	19	10	M4×0.5	Ø8×Ø4×1 - 1EA
WBK06	6	19	30	18	17	11	5	6.8	2.5	24	12	M6×0.75	Ø9.1×Ø6×1 - 1EA

SUPPORT UNIT

SUPPORT UNIT FOR BALL SCREW (HIGH LOAD)

Support Unit For Ball Screw (High Load)

Structure

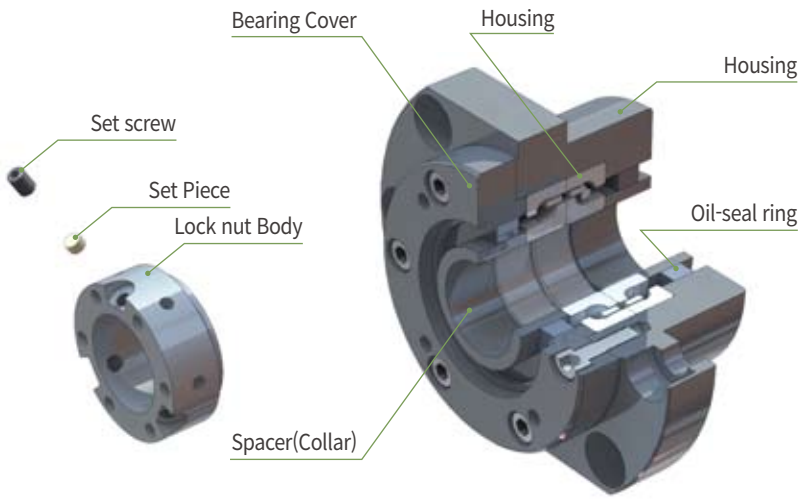

Bearing Combinations

DF Combinations

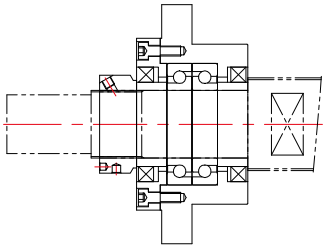

DFD Combinations

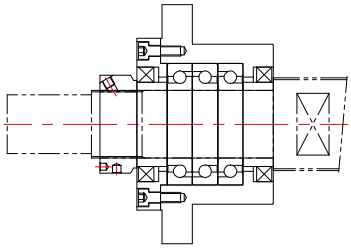

DFF Combinations

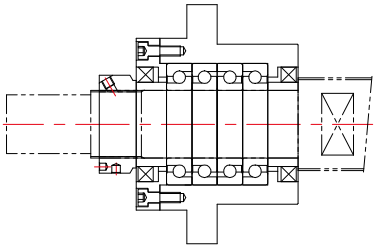

How to Order

SWBK25 (Model) | DFD (1 Bearing Combinations) | - (2 Surface Treatment)

①Bearing Combinations	mark	combinations
	DF	Double-row
	DFD	Triple-row
	DFF	Four-row

②Surface Treatment	mark	Surface Treatment
	no mark	Black Oxide
	RA	Low temperature Black Chrome Plating (Raydent)

SUPPORT UNIT

SUPPORT UNIT FOR BALL SCREW (HIGH LOAD)

Support Unit For Ball Screw (High Load)

List of Bearings

Model	Bearing Combinations	Bearing	Basic Dynamic Load (N)	Permissible Axial Load (N)	Preload (N)	Axial Rigidity N/μm	Starting Torque (N·cm)
SWBK17	DF	17TAC47C	23,000	26,600	1,450	630	14
SWBK17	DFD	17TAC47C	37,500	53,000	1,970	930	19
SWBK20	DF	20TAC47C	23,000	26,600	1,450	630	14
SWBK20	DFD	20TAC47C	37,500	53,000	1,970	930	19
SWBK25	DF	25TAC 62C	29,900	40,500	2,280	850	21
SWBK25	DFD	25TAC 62C	48,500	81,500	3,100	1,250	28
SWBK30	DF	30TAC 62C	30,500	43,000	2,400	890	23
SWBK30	DFD	30TAC 62C	50,000	86,000	3,260	1,310	30
SWBK35	DF	35TAC 72C	32,500	50,000	2,750	1,030	27
SWBK35	DFD	35TAC 72C	53,000	100,000	3,740	1,500	34
SWBK35	DFF	35TAC 72C	53,000	100,000	5,490	2,060	43
SWBK40	DF	40TAC 72C	33,500	52,000	2,860	1,080	28
SWBK40	DFD	40TAC 72C	54,000	104,000	3,900	1,590	36
SWBK40	DFF	40TAC 72C	54,000	104,000	5,730	2,150	46

SUPPORT UNIT : SWBK SERIES

SUPPORT UNIT FOR BALL SCREW (HIGH LOAD)

SWBK 17, SWBK 20

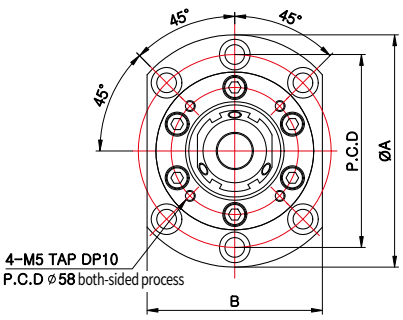

SWBK 25, SWBK 30

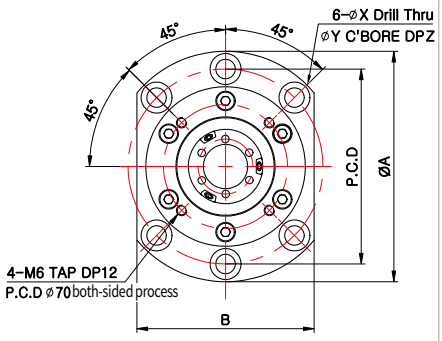

SWBK 35, SWBK 40

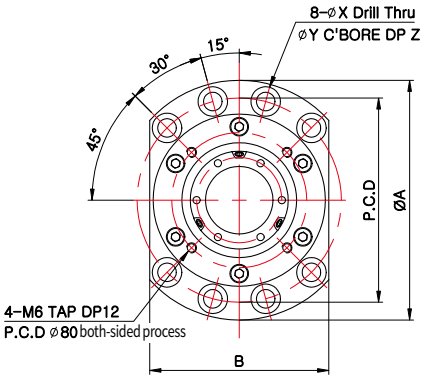

DF Combinations

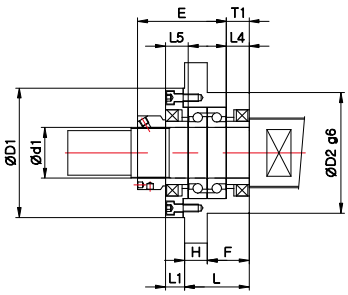

DFD Combinations

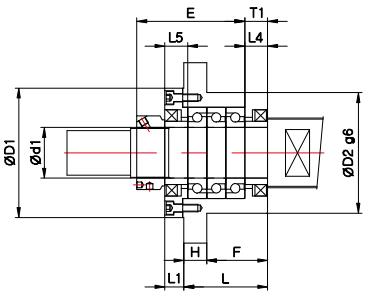

DFF Combinations

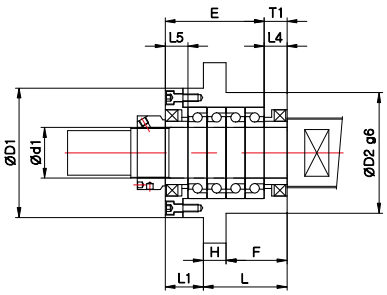

Dimensions

Model	Sizes (mm)																	Mass (g)
	Body															Spacer(collar)		
	d1	L	H	F	E	T1	D1	D2	A	P.C.D	B	L1	X	Y	Z	L4	L5	
SWBK17-DF	17	47	15	32	63	15	72	70	106	88	80	13	9	14	8.5	15	15	1900
SWBK17-DFD	17	62	15	47	78	15	72	70	106	88	80	13	9	14	8.5	15	15	2300
SWBK20-DF	20	47	15	32	63	15	72	70	106	88	80	13	9	14	8.5	15	15	1900
SWBK20-DFD	20	62	15	47	78	15	72	70	106	88	80	13	9	14	8.5	15	15	2250
SWBK25-DF	25	51	18	33	68	18	90	85	130	110	100	15	11	17.5	11	18	18	3100
SWBK25-DFD	25	66	18	48	83	18	90	85	130	110	100	15	11	17.5	11	18	18	3400
SWBK30-DF	30	51	18	33	68	18	90	85	130	110	100	15	11	17.5	11	18	18	3000
SWBK30-DFD	30	66	18	48	83	18	90	85	130	110	100	15	11	17.5	11	18	18	3300
SWBK35-DF	35	51	18	33	68	18	102	95	142	121	106	15	11	17.5	11	18	18	3400
SWBK35-DFD	35	66	18	48	83	18	102	95	142	121	106	15	11	17.5	11	18	18	4300
SWBK35-DFF	35	66	18	48	98	18	102	95	142	121	106	30	11	17.5	11	18	18	5000
SWBK40-DF	40	51	18	33	70	18	102	95	142	121	106	15	11	17.5	11	18	18	3600
SWBK40-DFD	40	66	18	48	85	18	102	95	142	121	106	15	11	17.5	11	18	18	4200
SWBK40-DFF	40	66	18	48	100	18	102	95	142	121	106	30	11	17.5	11	18	18	5700

SUPPORT UNIT

SUPPORT UNIT FOR BALL SCREW (GREASE-INJECTION TYPE)

Structure

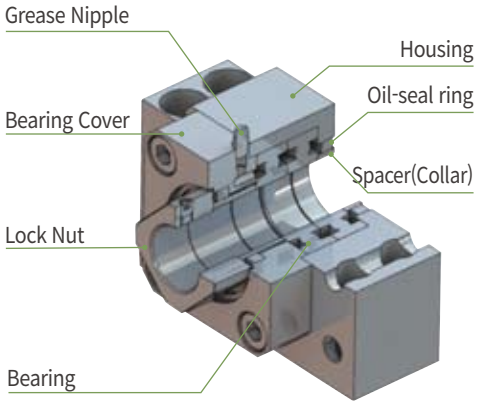

BK-G | FK-G | SWBK-G

- Advance design with a nipple being attached and a passage carved on the bearing cover for a easier grease refill
- Prevention of foreign material and leak of grease by the inner oil-seal rings
- Accompanied by a high accuracy lock-nut and collars(spacer)

Features of BK-G, FK-G & SWBK-G Series

Easy and Simple Grease Injection : This structure does not require the mounted Support unit to be detached from the ball screw and grease can be simply injected through the nipple on the body.

Enhanced Lubrication Performance & Reduced Bearing Friction : In terms that it is possible to frequently refill grease, it helps to reduce friction/abrasion of bearing and eventually extends the lifespan.

When a Support unit is mounted at a volatile circumstance or used with vertical drive motors, grease usually gets disappeared and lubrication of bearing doesn't run smoothly. Thus, this Grease injection-type Support Unit series lets you refill grease easily and solves this issue.

How To Inject(Refill) Grease

- While a Support Unit is mounted, you may inject grease through the nipple on the Support unit body, rotating the ball screw slowly.

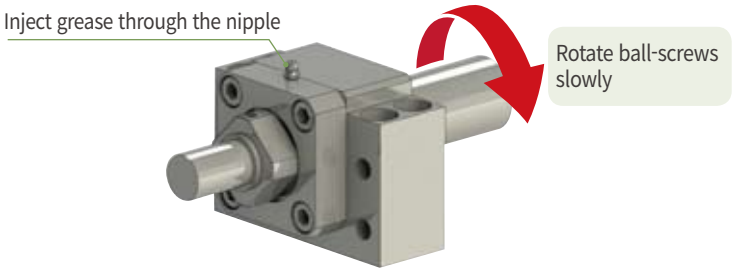

How to Order

BK17-G (Model) **P0-C7** (① Precision grade mark) **-** (② Surface Treatment)

	Mark	Bearing precision grade	Preload
①Precision grade mark	P5	P5	Medium
	C8	General	Medium
	P0-C7	General	Light

	mark	Surface Treatment
②Surface Treatment	no mark	Black Oxide
	RA	Low temperature Black Chrome Plating (Raydent)

SUPPORT UNIT

SUPPORT UNIT FOR BALL SCREW (GREASE-INJECTION TYPE)

Recommended Shape Of Ball Screw Shaft-End (Fixed Side)

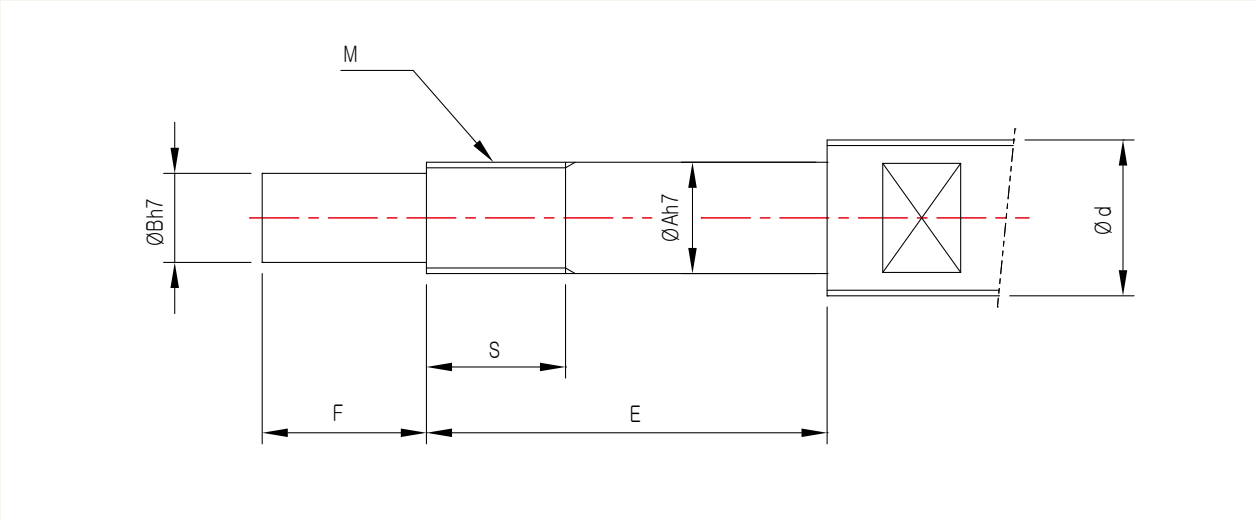

Dimensions(mm)											Lock-nut	
d	A	B	BK				FK				Model	Size (MxPitch)
			Model	E	F	S	Model	E	F	S		
Ø25 - Ø28	17	15	BK17-G	65	23	17	FK17-G	67	23	17	RN17	M17 x 1
	20	17	BK20-G	65	25	17	FK20-G	73	25	17	RN20	M20 x 1
Ø30 - Ø36	25	20	BK25-G	80	30	20	FK25-G	86	30	20	RN25	M25 x 1.5
Ø40	30	25	BK30-G	87	38	25	FK30-G	87	38	25	RN30	M30 x 1.5
Ø45	35	30	BK35-G	93	45	28	FK35-G	93	45	28	RN35	M35 x 1.5
Ø50 - Ø55	40	35	BK40-G	114	50	35	FK40-G	114	50	35	RN40	M40 x 1.5

Dimensions(mm)								Lock-nut	
d	A	B	SWBK					Model	Size (MxPitch)
			Model		E	F	S		
Ø25 - Ø28	17	15	SWBK17-G	DF	93	23	22	HLRN17	M17 x 1
				DFD	108				
	20	17	SWBK20-G	DF	93	25	24	HLRN20	M20 x 1
				DFD	108				
Ø30 - Ø36	25	20	SWBK25-G	DF	98	30	25	HLRN25	M25 x 1.5
				DFD	113				
Ø40	30	25	SWBK30-G	DF	98	38	25	HLRN30	M30 x 1.5
				DFD	113				
Ø45	35	30	SWBK35-G	DF	101	45	27	HLRN35	M35 x 1.5
				DFD	116				
				DFF	131				
Ø50 - Ø55	40	35	SWBK40-G	DF	106	50	32	HLRN40	M40 x 1.5
				DFD	121				
				DFF	136				

SUPPORT UNIT : BK-G SERIES

SUPPORT UNIT FOR BALL SCREW (GREASE-INJECTION TYPE / GENERAL LOAD)

BK17-G ~ BK40-G

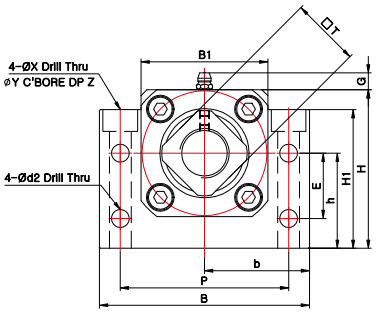

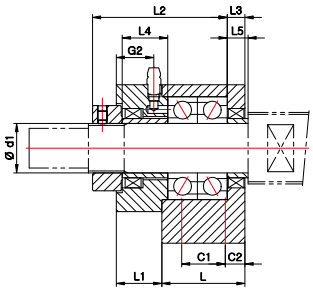

Dimensions

Model	Sizes (mm)																							Mass (g)
	Body																					Spacer(collar)		
	d1	L	L1	L2	L3	B	H	b±0.02	h±0.02	B1	H1	E	P	C1	C2	d2	X	Y	Z	□T	G	G2	L4	L5	
BK17-G	17	35	18	56	7	86	64	43	39	50	55	28	68	19	8	6.6	9	14	8.5	24	8.5	14	19	7	1500
BK20-G	20	35	20	55	8	88	60	44	34	52	50	22	70	19	8	6.6	9	14	8.5	30	8.5	16	20	8	1400
BK25-G	25	42	23	68	9	106	80	53	48	64	70	33	85	22	10	9	11	17.5	11	35	8.5	19	23	9	2600
BK30-G	30	45	21.5	74.5	9	128	89	64	51	76	78	33	102	23	11	11	14	20	13	40	8.5	17.5	22.5	9	3600
BK35-G	35	50	21	77	12	140	96	70	52	88	79	35	114	26	12	11	14	20	13	50	8.5	17	22	12	4800
BK40-G	40	61	27	92.5	15	160	110	80	60	100	90	37	130	33	14	14	18	26	17.5	50	8.5	23	31.5	15	7400

SUPPORT UNIT : FK-G SERIES

SUPPORT UNIT FOR BALL SCREW (GREASE-INJECTION TYPE / GENERAL LOAD)

FK17-G ~ FK30-G

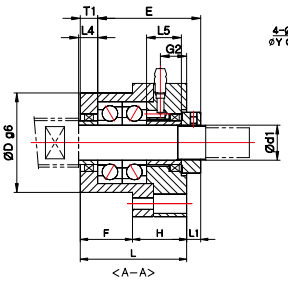

[Install Method A]

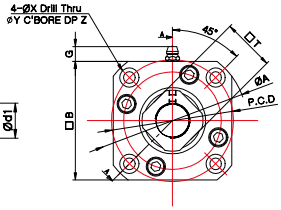

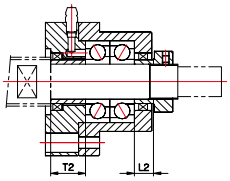

[Install Method B]

※ **Additional note for [FK-30]**

In case of choosing "Install Method B", size of spacer(collar) needs to be accordingly changed. Please contact Sung-il Customer Service team for more details.

Dimensions

Model	Sizes (mm)																				Mass (g)
	Body																		Spacer(collar)		
	d1	L	H	F	E	D	A	P.C.D	□B	Install Method A		Install Method B		X	Y	Z	□T	G	G2	L4	L5	
										L1	T1	L2	T2									
FK17-G	17	55	32	23	56	50	77	62	61	10	9	13	12	6.6	11	20	24	8.5	16	9	19	1100
FK20-G	20	61	31	30	59	57	85	70	68	8	10	12	14	6.6	11	19	30	8.5	15	11	20	1400
FK25-G	25	65	35	30	68	63	98	80	79	13	10	20	17	9	15	21	35	8.5	17	15	23	1800
FK30-G	30	69.5	37.5	32	74.5	75	117	95	93	17	12	17	18	11	17.5	22.5	40	8.5	18.5	9	22.5	2700

FK35-G ~ FK40-G

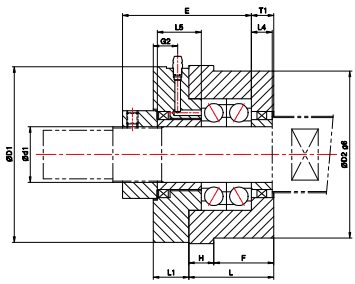

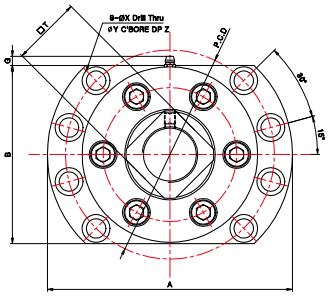

Dimensions

Model	Sizes (mm)																				Mass (g)
	Body																		Spacer(collar)		
	d1	L	H	F	E	D1	D2	A	P.C.D	B	L1	T1	X	Y	Z	□T	G	G2	L4	L5	
FK35-G	35	48	16	32	77	112	100	154	132	120	24	12	11	17.5	11	50	3.5	16	12	22	4700
FK40-G	40	61	18	43	92.5	126	120	176	150	128	25.5	16	14	20	13	50	6.5	17.5	15	31.5	7300

SUPPORT UNIT : SWBK-G SERIES

SUPPORT UNIT FOR BALL SCREW (GREASE-INJECTION TYPE / HIGH LOAD)

SWBK17-G ~ SWBK40-G

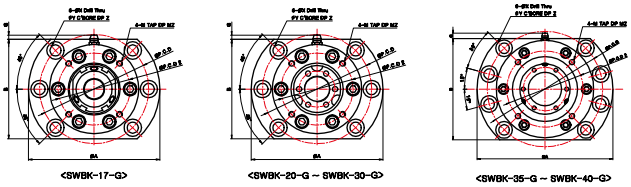

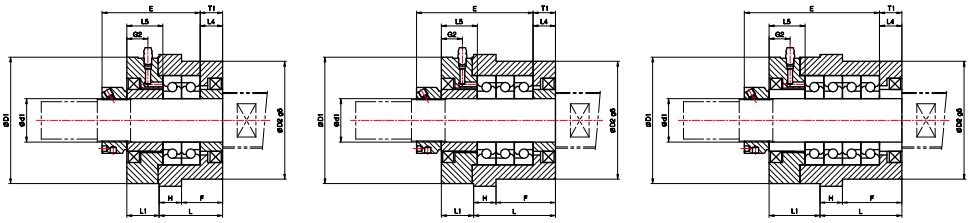

Dimensions

Model	Sizes (mm)																					Mass (g)
	Body																			Spacer(collar)		
	d1	L	H	F	E	T1	D1	D2	A	P.C.D	P.C.D 2	B	L1	X	Y	Z	M	MZ	G	G2	L4	L5	
SWBK17-G-DF	17	47	15	32	76	15	72	70	106	88	58	80	26	9	14	8.5	M5	10	3.5	17	15	28	2300
SWBK17-G-DFD	17	62	15	47	91	15	72	70	106	88	58	80	26	9	14	8.5	M5	10	3.5	17	15	28	2700
SWBK20-G-DF	20	47	15	32	76	15	72	70	106	88	58	80	26	9	14	8.5	M5	10	3.5	17	15	28	2300
SWBK20-G-DFD	20	62	15	47	91	15	72	70	106	88	58	80	26	9	14	8.5	M5	10	3.5	17	15	28	2700
SWBK25-G-DF	25	51	18	33	78	18	90	85	130	110	70	100	25	11	17.5	11	M6	12	2.5	16	18	28	3700
SWBK25-G-DFD	25	66	18	48	93	18	90	85	130	110	70	100	25	11	17.5	11	M6	12	2.5	16	18	28	4300
SWBK30-G-DF	30	51	18	33	78	18	90	85	130	110	70	100	25	11	17.5	11	M6	12	2.5	16	18	28	3600
SWBK30-G-DFD	30	66	18	48	93	18	90	85	130	110	70	100	25	11	17.5	11	M6	12	2.5	16	18	28	4100
SWBK35-G-DF	35	51	18	33	79	18	102	95	142	121	80	106	26	11	17.5	11	M6	12	5.5	17	18	29	4300
SWBK35-G-DFD	35	66	18	48	94	18	102	95	142	121	80	106	26	11	17.5	11	M6	12	5.5	17	18	29	5000
SWBK35-G-DFF	35	66	18	48	109	18	102	95	142	121	80	106	41	11	17.5	11	M6	12	5.5	17	18	29	5800
SWBK40-G-DF	40	51	18	33	81	18	102	95	142	121	80	106	26	11	17.5	11	M6	12	5.5	17	18	29	5000
SWBK40-G-DFD	40	66	18	48	96	18	102	95	142	121	80	106	26	11	17.5	11	M6	12	5.5	17	18	29	6000
SWBK40-G-DFF	40	66	18	48	111	18	102	95	142	121	80	106	41	11	17.5	11	M6	12	5.5	17	18	29	7200

LOCK-NUT : RN SERIES

LOCK-NUT (GENERAL LOAD)

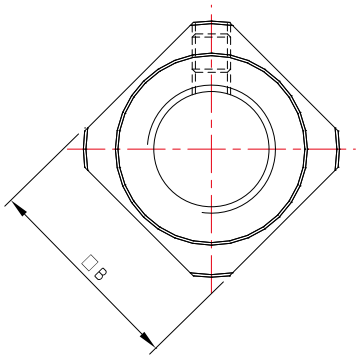

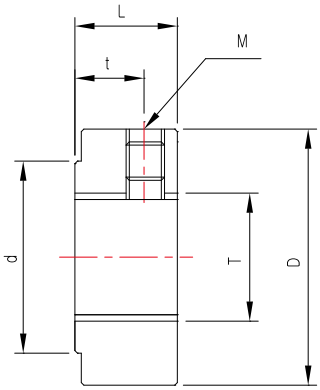

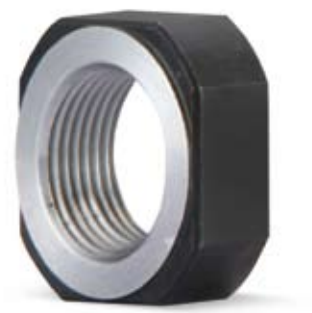

Dimensions

Model	Sizes (mm)							Fastening Torque (N.m)	Mass (g)
	T	M	D	d	L	t	□B		
RN4	M4×0.5	M3×0.5	11	8.5	5	2.7	10	1.6	4
RN5	M5×0.5	M3×0.5	13	9	5	2.7	11	2	5
RN6	M6×0.75	M3×0.5	14.5	10	5	2.7	12	2.5	5
RN8	M8×1	M3×0.5	17	13	6.5	4	14	5	8
RN8 (0.75P)	M8×0.75	M3×0.5	17	13	6.5	4	14	5	8
RN10	M10×1	M4×0.7	20	15	8	5.5	16	9.5	10
RN10 (0.75P)	M10×0.75	M4×0.7	20	15	8	5.5	16	9.5	10
RN12	M12×1	M4×0.7	22	17	8	5.5	19	14	14
RN15	M15×1	M4×0.7	25	21	8	4.5	22	24	15
RN17	M17×1	M4×0.7	30	25	13	9	24	35	17
RN20	M20×1	M4×0.7	35	26	11	7	30	48	35
RN25	M25×1.5	M5×0.8	43	33	15	10	35	86	45
RN30	M30×1.5	M6×1	48	39	20	14	40	128	80
RN35	M35×1.5	M8×1.25	60	46	21	14	50	192	130
RN40	M40×1.5	M8×1.25	63	51	25	18	50	256	235

LOCK-NUT : ZN SERIES

LOCK-NUT (GENERAL LOAD)

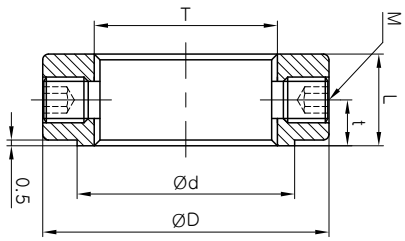

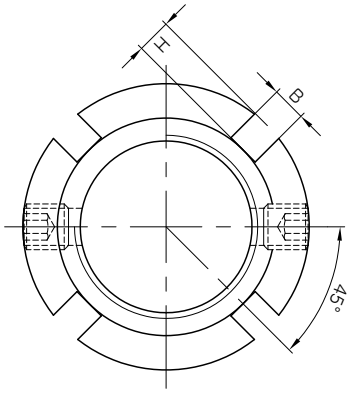

Dimensions

Model	Sizes (mm)								Fastening Torque (N.m)	Mass (g)
	T	M	D	d	L	t	B	H		
ZN8	M8X1.0	2-M4X0.7	16	12	8	4	3	2	5	7
ZN8 (0.75P)	M8X0.75	2-M4X0.7	16	12	8	4	3	2	5	7
ZN10	M10X1.0	2-M4X0.7	18	14	8	4	3	2	9.5	9
ZN10 (0.75P)	M10X0.75	2-M4X0.7	18	14	8	4	3	2	9.5	9
ZN12	M12X1.0	2-M4X0.7	22	16	8	4	3	3	14	13
ZN15	M15X1.0	2-M4X0.7	25	19	8	4	3	3	24	17
ZN17	M17X1.0	2-M5X0.8	28	21	10	5	4	3	35	25
ZN20	M20X1.0	2-M5X0.8	32	25	10	5	4	3	48	33
ZN25	M25X1.5	2-M6X1	38	31	12	6	5	3	86	54
ZN30	M30X1.5	2-M6X1	45	38	12	6	5	3	128	77
ZN35	M35X1.5	2-M6X1	52	45	12	6	5	3	192	103
ZN40	M40X1.5	2-M6X1	58	50	14	7	6	3	256	143

LOCK-NUT : HLRN SERIES

LOCK-NUT (HIGH LOAD)

HLRN17

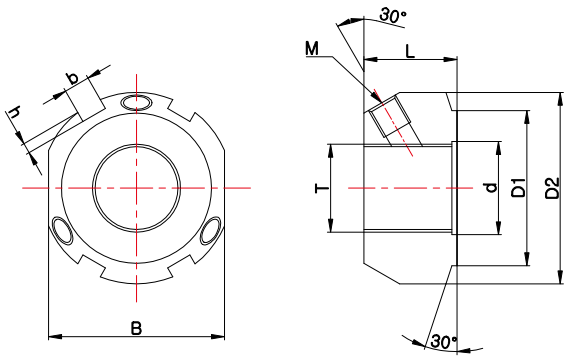

HLRN20 ~ HLRN40

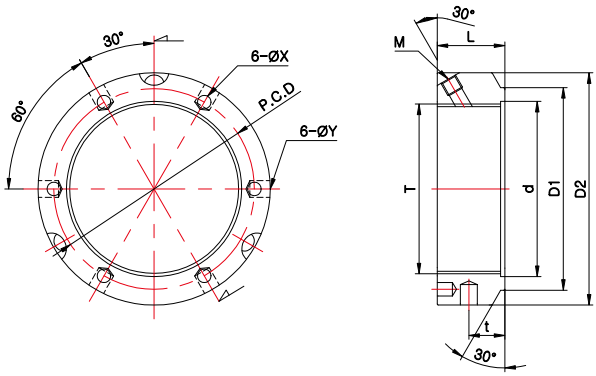

Dimensions

Model	Sizes (mm)													Fastening Torque (N.m)
	T	M	d	D1	D2	t	L	X	Y	P.C.D	b	h	B	
HLRN17	M17x1.0	M6x6	18	30	37	-	18	-	-	-	5	2.5	30	41
HLRN20	M20x1.0	M6x6	21	30	38	10	18	4.3	4	29				45
HLRN25	M25x1.5	M6x6	26	35	42	11	20	4.3	4	32.5				87
HLRN30	M30x1.5	M6x6	31	40	48	11	20	4.3	5	40.5				105
HLRN35	M35x1.5	M6x6	36	47	53	11	20	4.3	5	45.5				145
HLRN40	M40x1.5	M6x6	41	52	58	12	22	4.3	5	50.5				160

JOINT UNIT : SJU SERIES

JOINT UNIT (SUPPORT UNIT MOUNTED TYPE)

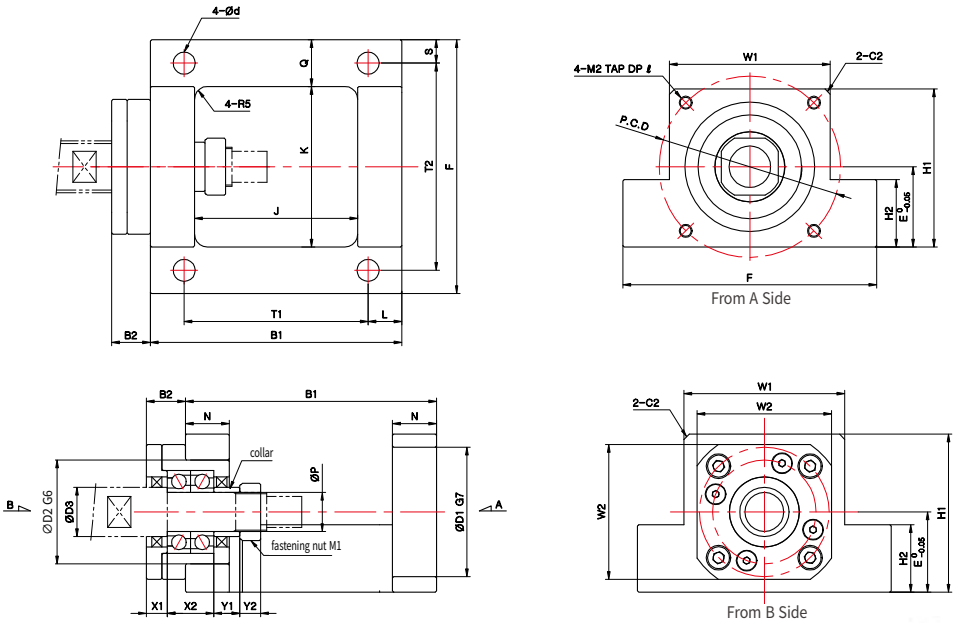

※ This product structurally minimizes the assembly error as the connected surfaces to both ball screw and servo motor are included in an one-piece component.
※ The P.C.D values of motor-connected area is different by servo motor model, so please check the motor specifications in advance.

Dimensions

Model	Sizes (mm)																												Mounted Support Unit Model
	P	B1	B2	D1	D2	D3	E	F	H1	H2	J	K	L	N	Q	S	T1	T2	W1	W2	X1	X2	Y1	Y2	P.C.D	M1	M2	d	l	
SJU-8A	8	67	9	30	28	12	21	64	41	19	43	40	10	12	12	6	47	52	40	35	5	14	5.5	6.5	45	RN8 (M8)	M3	5.5	8	FK8
SJU-8B																									46		M4		10	
SJU-10A	10	74	10	30	34	14	25	70	46	23	46	42	10	14	14	7	54	56	42	42	5.5	16	5.5	8	45	RN10 (M10)	M3	6.5	8	FK10
SJU-10B																									46		M4		10	
SJU-12A	12	74	10	30	36	15	25	72	47	23	46	44	10	14	14	7	54	58	44	44	5.5	16	5.5	8	45	RN12 (M12)	M3	6.5	8	FK12
SJU-12B																									46		M4		10	
SJU-15	15	97	15	50	40	20	31	98	61	26	63	62	13	17	18	9	71	80	62	52	8	18	10	8	70	RN15 (M15)	M5	8.5	13	FK15

JOINT UNIT : SBJU SERIES

JOINT UNIT (GENERAL TYPE)

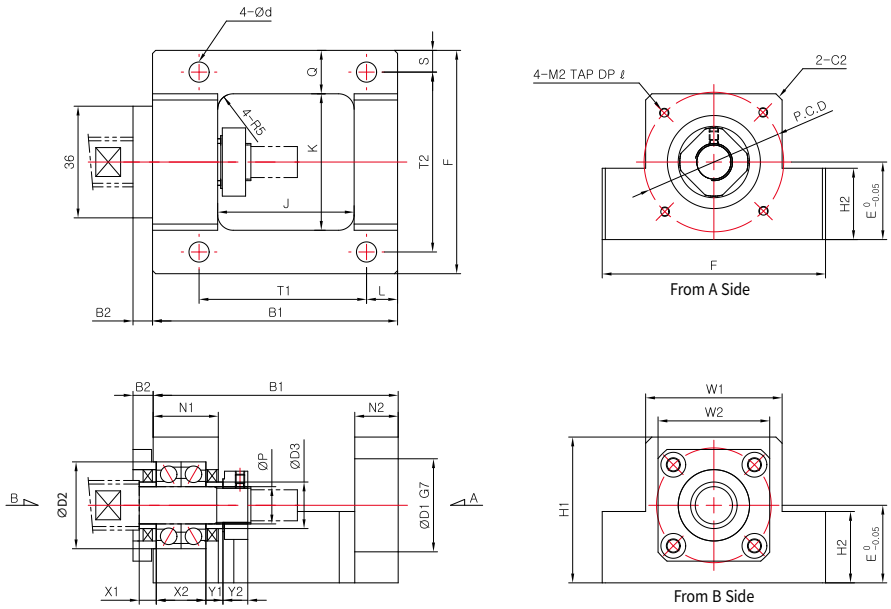

※ This product structurally minimizes the assembly error as the connected surfaces to both ball screw and servo motor are included in an one-piece component.

※ The P.C.D values of motor-connected area is different by servo motor model, so please check the motor specifications in advance.

Dimensions

Model	Sizes (mm)																												
	P	B1	B2	D1	D2	D3	E	F	H1	H2	J	K	L	N1	N2	Q	S	T1	T2	W1	W2	X1	X2	Y1	Y2	P.C.D	M1	M2	d	l
SBJU-8A	8	73	6.5	30	24 (22)	12	21	64	41	19	42	40	10	19	12	12	6	47	52	40	34	7.5	14	5.5	6.5	45	RN8 (M8)	M3	5.5	8
SBJU-8B																										46		M4		10
SBJU-10A	10	79	6.5	30	26	14	25	70	46	23	44	42	10	21	14	14	7	54	56	42	36	5.5	16	5.5	8	45	RN10 (M10)	M3	6.5	8
SBJU-10B																										46		M4		10
SBJU-12A	12	79	6.5	30	28	15	25	72	47	23	44	44	10	21	14	14	7	54	58	44	36	5.5	16	5.5	8	45	RN12 (M12)	M3	6.5	8
SBJU-12B																										46		M4		10
SBJU-15	15	105	6.5	50	32	20	31	98	61	26	65	62	13	23	17	18	9	71	80	62	40	10	18	10	8	70	RN15 (M15)	M5	8.5	13

BEARING UNIT

BEARING UNIT

SBS Series

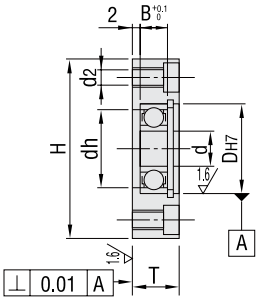

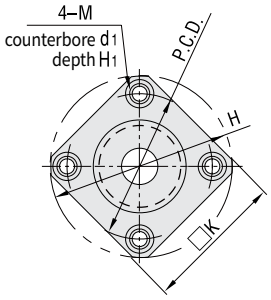

Dimensions

Model	Sizes (mm)												Bearing
	d	D	B	H	□K	T	dh	P.C.D	M	d2	d1	H1	
SBS-8	8	22	7	45	36	12	18	35	5	4.3	8	4.4	608ZZ
SBS-10	10	26	8	50	39	13	22	40	5	4.3	8	4.4	6000ZZ
SBS-12	12	28	8	52	40	13	24	42	5	4.3	8	4.4	6001ZZ
SBS-15	15	32	9	60	46	14	28	48	6	5.2	9.5	5.4	6002ZZ
SBS-17	17	40	12	72	54	18	34	60	6	5.2	9.5	5.4	6203ZZ
SBS-20	20	42	12	77	59	18	36	64	8	6.8	11	6.5	6004ZZ
SBS-25	25	52	15	94	72	22	45	78	10	8.5	14	8.6	6205ZZ
SBS-30	30	62	16	104	79	23	55	88	10	8.5	14	8.6	6206ZZ

SBD Series

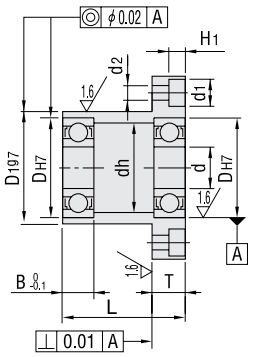

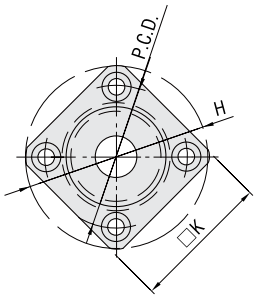

Dimensions

Model	Sizes (mm)													Bearing
	d	D	D1	B	L	H	□K	T	dh	P.C.D	d2	d1	H1	
SBD-8	8	22	27	7	25	45	36	8	18	35	4.3	8	4.4	608ZZ
SBD-10	10	26	32	8	30	50	39	8	22	40	4.3	8	4.4	6000ZZ
SBD-12	12	28	34	8	30	52	40	8	24	42	4.3	8	4.4	6001ZZ
SBD-15	15	32	38	9	35	60	46	10	28	48	5.2	9.5	5.4	6002ZZ
SBD-17	17	40	48	12	45	72	54	10	34	60	5.2	9.5	5.4	6203ZZ
SBD-20	20	42	50	12	45	77	59	11	36	64	6.8	11	6.5	6004ZZ
SBD-25	25	52	60	15	45	94	72	13	45	78	8.5	14	8.6	6205ZZ
SBD-30	30	62	70	16	50	104	79	13	55	88	8.5	14	8.6	6206ZZ